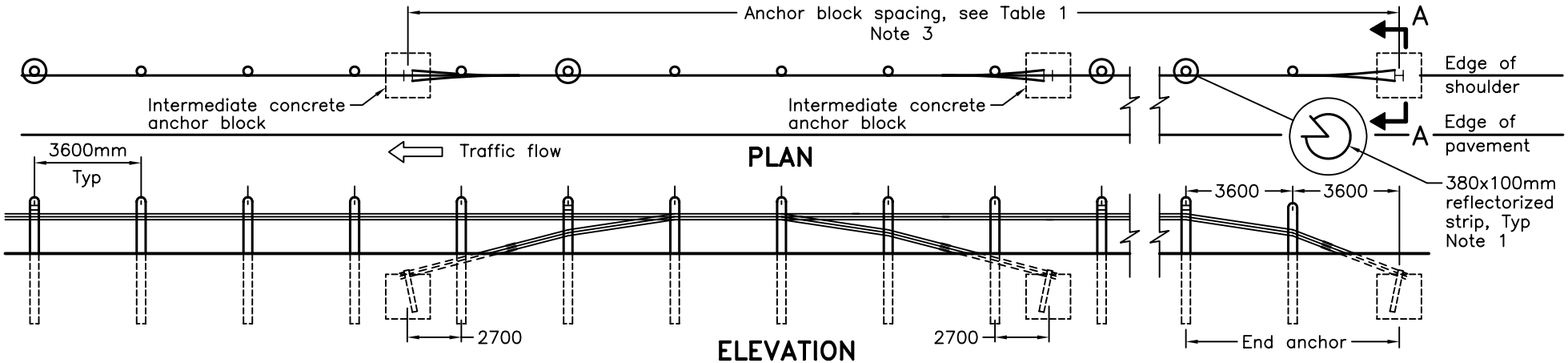

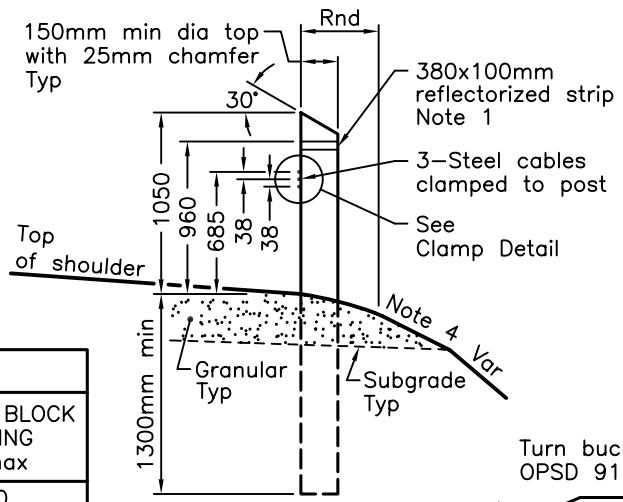

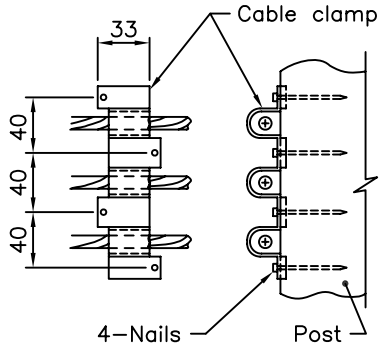

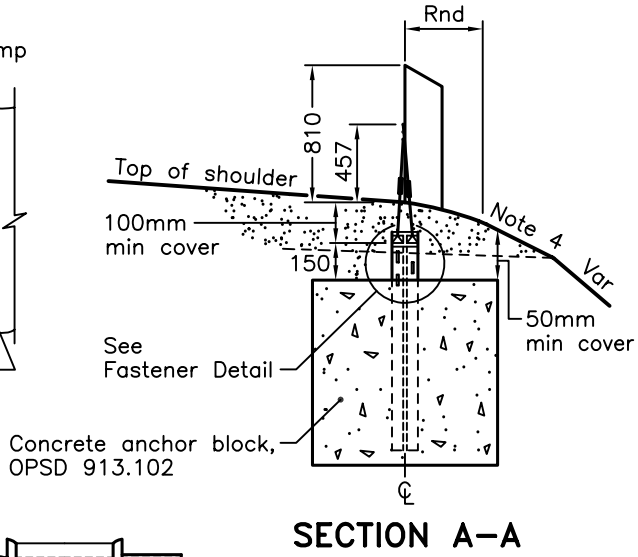

TABLE 1	
RADIUS OF CURVATURE m	ANCHOR BLOCK SPACING m max
Over 600	300
250 to 600	100

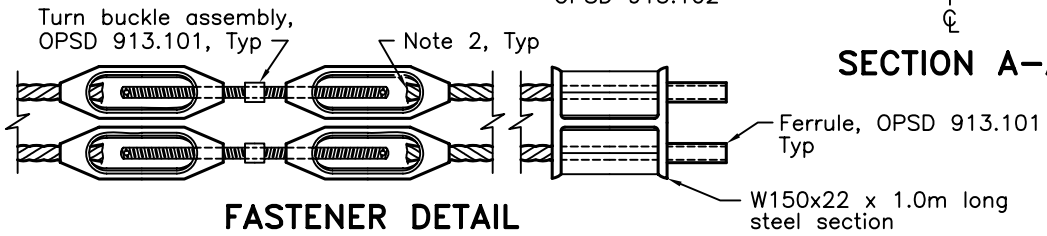

NOTES:

1 Reflectorized strips as specified.
2 Ends of cable strands shall protrude past the end of the wedge 10mm.
3 Minimum installation length of 46.8m.
4 Slope 3H:1V or flatter when specified.

A All dimensions are in millimetres unless otherwise shown.

ONTARIO PROVINCIAL STANDARD DRAWING	Nov 2008	Rev	1
GUIDE RAIL SYSTEM, CABLE INSTALLATION – SHOULDER			
	OPSD 913.130		