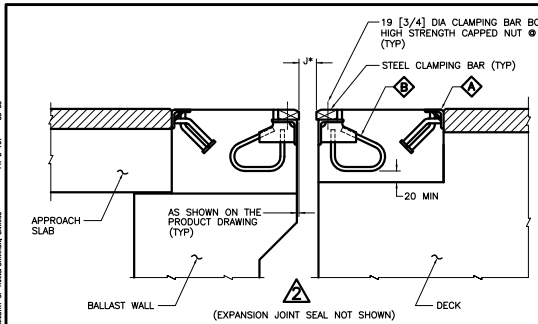

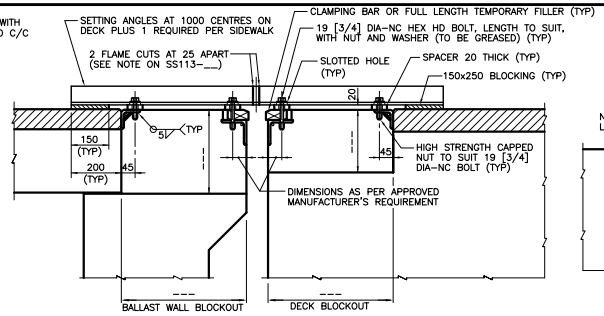

SETTING DEVICE AND BLOCKOUTS

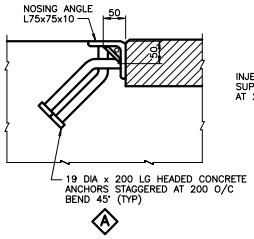

METRIC

DIMENSIONS ARE IN METRES AND/OR MILLIMETRES UNLESS OTHERWISE SHOWN

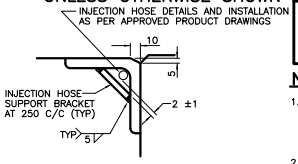

INJECTION HOSE SUPPORT BRACKET DETAIL

CONT No	
WP	No

STRIP SEAL EXPANSION JOINT TYPE "A" DETAILS

SHEET

NOTES:

1. STEEL CLAMPING BAR SEGMENTS SHALL BE 1.3m TO 2.0m LONG. FOR STAGED EXPANSION JOINT CONSTRUCTION, STEEL CLAMPING BAR SHALL TERMINATE A MINIMUM OF 100mm FROM EXPOSED END OF STEEL ARMOURING. GAP BETWEEN ADJACENT CLAMPING BARS SHALL NOT EXCEED 3mm.
2. ALL CLAMPING BARS SHALL PREFERABLY BE ONE PIECE THROUGH ANY CHANGE IN DIRECTION, BUT AT CURB AND CURB-TO-SIDEWALK SLIDER PLATE THEY MAY BE OF MORE THAN ONE PIECE. EACH SUCH PIECE SHALL HAVE A MINIMUM OF 2 CLAMPING BOLTS.
3. FOR DETAILS OF REINFORCING IN EXPANSION JOINT BLOCKOUT, SEE DECK AND ABUTMENT REINFORCING DRAWINGS.
4. HEADED CONCRETE ANCHORS IN NOSING ANGLES SHALL BE LOCATED WITHIN 75 mm OF EITHER SIDE OF FIELD SPLICES.
5. PROTECT INJECTION HOSE AND FITTINGS ADJACENT TO FIELD SPLICE DURING WELDING AND REMOVE PROTECTION PRIOR TO PLACING OF CONCRETE IN BLOCKOUT.
6. THIS DRAWING TO BE READ IN CONJUNCTION WITH DRAWING SS113-__.
7. LEGEND:
   [ ] – DENOTES FASTENER SIZE IN INCHES.

TABLE OF DESIGN REQUIREMENTS (TO BE FULLY COMPLETED BY DESIGNER)

EXP. JOINT LOCATION	MTO GAP ** RATING (mm)		DESIGN *** MOVEMENT	* "J" AT INSTALLATION TEMPERATURE (C) (mm)							
	MIN	MAX		-5°	0°	5°	10°	15°	20°	25°	30°

* DIMENSION 'J' MEASURED PERPENDICULAR TO CENTRELINE OF EXPANSION JOINT. WHERE MIN. AND MAX. FOR JOINT SUPPLIED DIFFER FROM THOSE SHOWN IN TABLE, 'J' DIMENSIONS SHALL BE REVISED BY CONTRACTOR AND SHOWN ON SHOP DRAWINGS. FOR STAGED CONSTRUCTION ON STRUCTURES OTHER THAN POST-TENSIONED, THE CONTRACTOR SHALL USE THE FIRST STAGE OBSERVED 'J' GAP TO INSTALL THE SECOND STAGE.

** MTO GAP, MEASURED BETWEEN PROJECTING FACES OF STEEL CLAMPING BAR, IS TAKEN FROM DSM 9.40.24, TYPE "A".

*** CALCULATED TOTAL MOVEMENT AT SLS OCCURRING AFTER TIME OF JOINT INSTALLATION. (MEASURED PARALLEL TO CENTRELINE OF STRUCTURE)

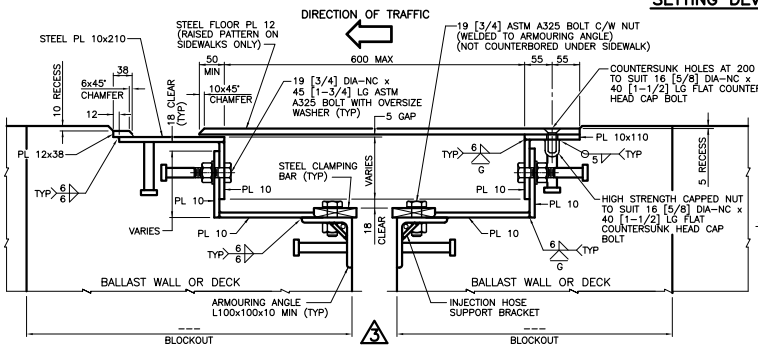

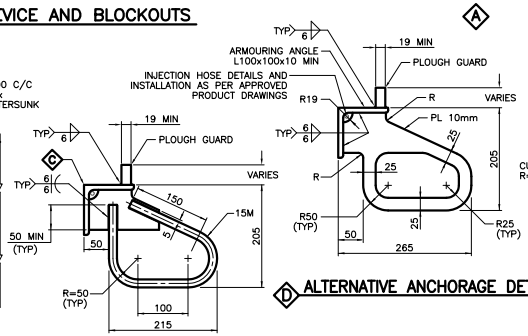

D ALTERNATIVE ANCHORAGE DETAIL

B ANCHORAGE DETAIL (FOR ALTERNATIVE SEE D)

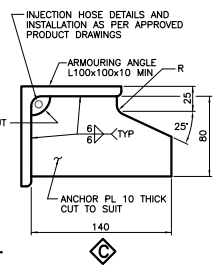

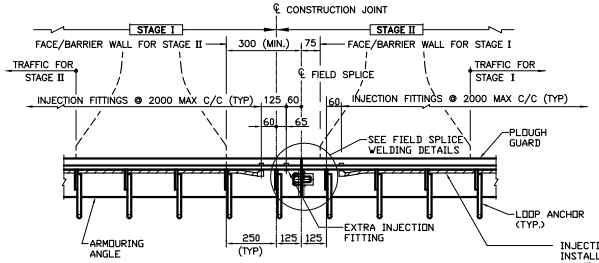

FIELD SPLICE DETAILS AT STAGED CONSTRUCTION FOR ARMOURING ANGLE

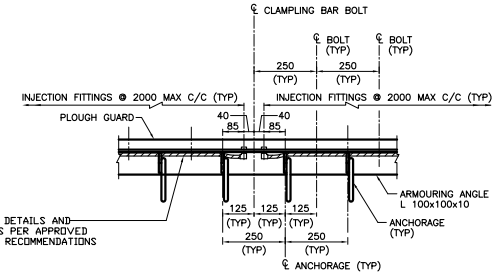

DETAILS OF ANCHORAGE AND INJECTION HOSE FOR ARMOURING ANGLE

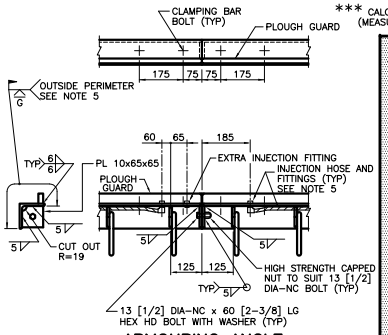

ARMOURING ANGLE FIELD SPLICE DETAIL

NOTES TO DESIGNER:

1. EXPANSION JOINT BLOCKOUT DIMENSIONS, (mm) SHALL BE AS FOLLOWS:

LOCATION	TYPE	BLOCKOUT	BALLAST WALL SIDE	DECK SIDE
BARRIER/PARAPET WALL	NEW	WIDTH	500	500
		DEPTH	335	250
	REHAB.	WIDTH	300 MIN.	300 MIN.
		DEPTH	250 MIN.	250
TRAFFIC LANES	NEW	WIDTH	500	500
		DEPTH	335	250
	REHAB.	WIDTH	300 MIN.	300 MIN.
		DEPTH	250 MIN.	250
BARRIER/PARAPET WALL WITH SIDEWALK	NEW & REHAB.	WIDTH	550	650
		DEPTH	VARIES	VARIES

2. USING THE ABOVE TABLE, THE DESIGNER SHALL FILL IN THE BLOCKOUT DIMENSIONS ON THIS DRAWING. THESE DIMENSIONS SHALL ALSO BE SHOWN ON THE CONTRACT DRAWINGS FOR DECK DETAILS AND ABUTMENT DETAILS.
3. THE 'NOTES TO DESIGNER' SHALL BE DELETED FROM THIS DRAWING PRIOR TO ISSUING OF THE CONTRACT.

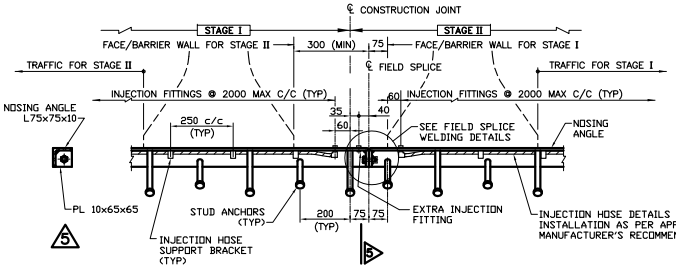

FIELD SPLICE DETAILS AT STAGED CONSTRUCTION FOR NOSING ANGLE

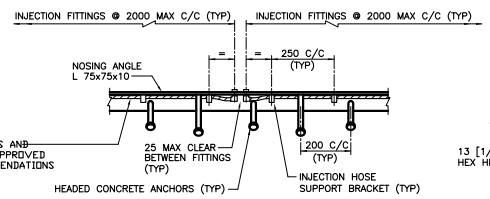

DETAILS OF HEADED CONCRETE ANCHORS AND INJECTION HOSE FOR NOSING ANGLE

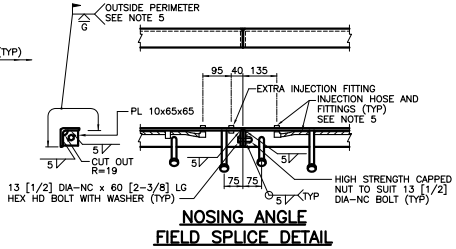

NOSING ANGLE FIELD SPLICE DETAIL

DRAWING NOT TO BE SCALED
100mm ON ORIGINAL DRAWING

REFER TO 1.1.8 IN THE STRUCTURAL MANUAL FOR PROFESSIONAL ENGINEER STAMPING REQUIREMENTS.

STANDARD DRAWING
JAN 2013

SS113-12

STRIP SEAL EXPANSION JOINT – TYPE "A" DETAILS

REVISIONS	DESCRIPTION				
DESIGN	CHK	CODE	CHBDC-00	CL 625-ONT	DATE
DRAWN	CHK	SITE			DWG

MINISTRY OF TRANSPORTATION, ONTARIO