METRIC
DIMENSIONS ARE IN METRES AND/OR MILLIMETRES UNLESS OTHERWISE SHOWN

DRAWING NOT TO BE SCALED
100mm ON ORIGINAL DRAWING

CONT No
WP No

SHEET

PRESTRESSED BOX GIRDERS DETAILS

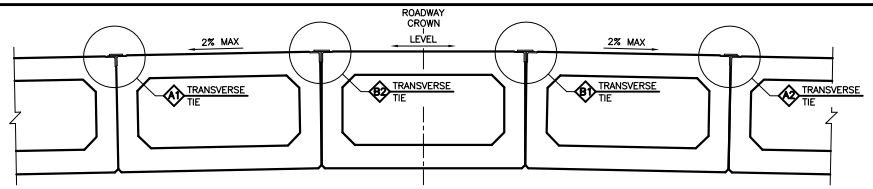

JOINT OFFSET FROM ROADWAY CROWN

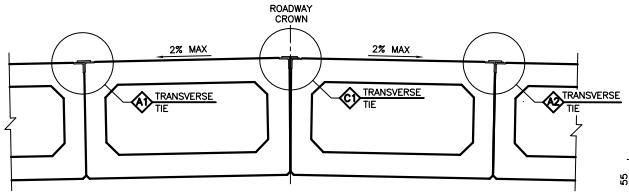

JOINT AT ROADWAY CROWN

TRANSVERSE TIE LOCATIONS

SPAN LENGTH	TIE LOCATIONS AT		
	1/4 SPAN	1/3 SPAN	MIDSPAN
≤24M	–	X	–
>24M	X	–	X

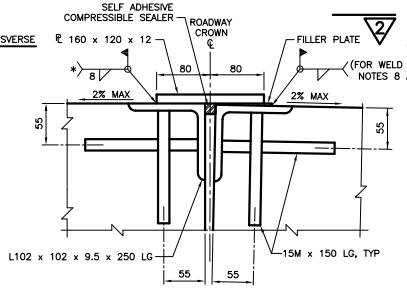

C1

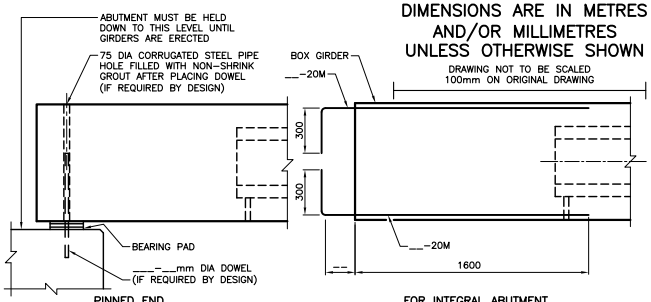

BEAM TO ABUTMENT

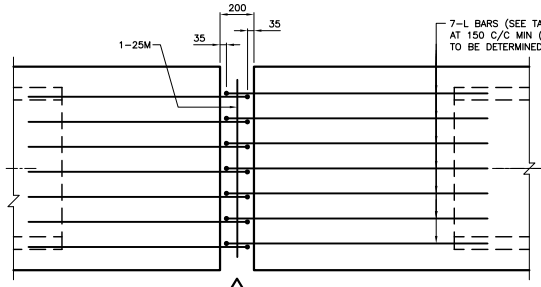

PRECAST BOX GIRDER	L BAR SIZE
B700, B800	15M
B900, B1000	20M

3

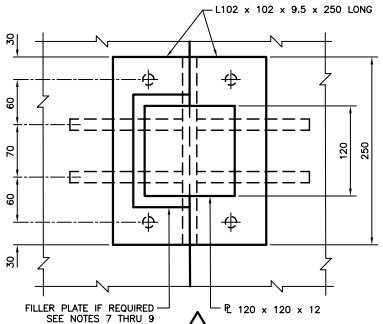

1

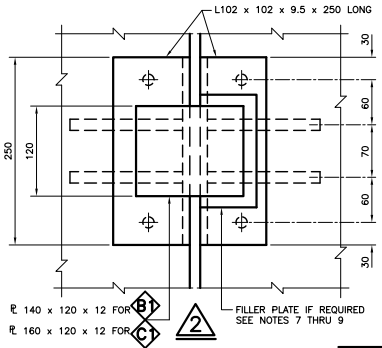

2

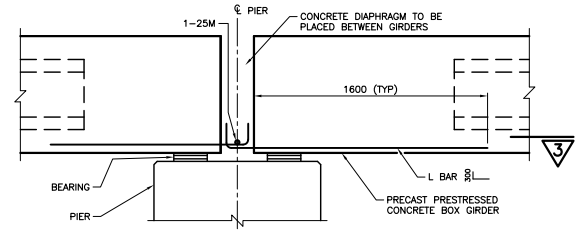

3

ELEVATION
POSITIVE MOMENT CONNECTION AT PIERS

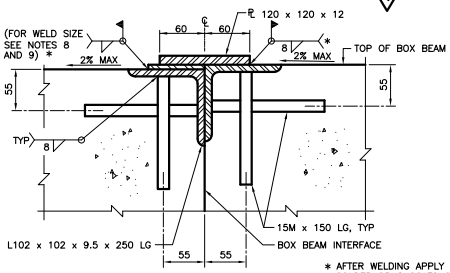

A1

* AFTER WELDING APPLY ZINC TOUCH UP SOLDER OR 2 COATS OF ZINC RICH PAINT AFTER THE AREA HAS BEEN CLEANED TO SSPC-SP10-NEAR WHITE METAL BLAST

(A2 SIMILAR BUT OPPOSITE HAND)

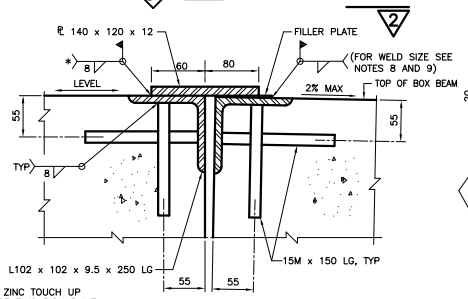

B1

(B2 SIMILAR BUT OPPOSITE HAND)

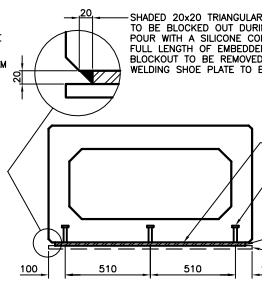

4

EMBEDDED BEARING PLATE DETAIL
(NON INTEGRAL ABUTMENT ENDS ONLY)

EMBEDDED PLATE LENGTH (B)	NO. OF ROWS OF SHEAR CONNECTOR (R)	TOTAL NO. OF SHEAR CONNECTOR (N)
B<450mm	2	6
450mm≤B<750mm	3	9
750mm≤B<1050mm	4	12

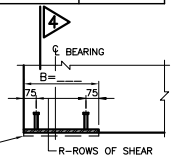

R-ROWS OF SHEAR CONNECTOR AT EQUAL SPACE (SEE TABLE)

ELEVATION

NOTES:

1. THIS DRAWING SHOWS TYPICAL DETAILS FOR PRECAST CONCRETE BOX GIRDERS AND IS TO BE READ IN CONJUNCTION WITH DRAWING SS107- .
2. STEEL PLATES AND ANGLES SHALL BE ACCORDING TO CSA/CSA G40.20-04/G40.21-04, GRADE 300W
3. STEEL PLATES AND ANGLES SHALL BE HOT-DIP GALVANIZED AFTER FABRICATION.
4. IF ANCHORED EMBEDDED STEEL BEARING PLATES ARE REQUIRED AT GIRDER ENDS, THEY SHALL HAVE A THICKNESS OF 20mm. THEY SHALL BE HOT-DIP GALVANIZED AFTER FABRICATION. ALL DAMAGED GALVANIZED SURFACES SHALL BE COATED WITH TWO COATS OF ZINC-RICH PAINT.
5. AT ENDS OF GIRDERS WHICH ARE NOT TO BE ENCASED IN CONCRETE, STRAND ENDS SHALL BE RECESSED AND GROUTED, AND GIRDER END FACE SHALL BE PAINTED WITH TWO COATS OF ASPHALTIC PAINT.
6. IF DOWEL BARS ARE REQUIRED AT GIRDER ENDS, THEY SHALL BE HOT-DIP GALVANIZED.
7. STEEL FILLER PLATES SHALL BE PROVIDED WHENEVER THE TOP OF BOX ELEVATIONS, AT THE TRANSVERSE TIE LOCATIONS, DIFFER MORE THAN 2mm.
8. IF THE THICKNESS OF THE REQUIRED STEEL FILLER PLATE, t^f, IS LESS THAN OR EQUAL TO 5mm, THE FILLER PLATE SIZE SHALL BE 120x60xt_f. THE SIZE OF THE WELD CONNECTING THE COMBINATION OF PLATES TO THE ANGLE SHALL BE INCREASED BY THE THICKNESS OF THE FILLER PLATE.
9. IF THE THICKNESS OF THE REQUIRED STEEL FILLER PLATE, t^f, IS GREATER THAN 5mm, THE FILLER PLATE SIZE SHALL BE 150x75xt_f, AND SHALL BE WELDED TO THE ANGLE WITH A WELD SIZE OF 2mm LESS THAN THE THICKNESS OF THE PLATE BUT NOT LESS THAN 6mm. THE 120x120x12mm PLATE SHALL BE WELDED ALL AROUND WITH AN 8mm WELD AS SHOWN.
10. IF ANCHORD EMBEDDED STEEL BEARING PLATES ARE REQUIRED THE REINFORCING MAY BE ADJUSTED SLIGHTLY TO ACCOMMODATE THE SHEAR CONNECTORS.

NOTES TO DESIGNER

1. FOR INTEGRAL ABUTMENT TYPE BRIDGES, THIS STANDARD DRAWING WILL NEED TO BE MODIFIED AS REQUIRED.
2. ANCHORED EMBEDDED STEEL BEARING PLATES WITH PINTLED BEVEL PLATES SHALL BE USED ONLY IF THE CALCULATED REQUIRED GIRDER SOFFIT UNDERCUT DIMENSION EXCEEDS 18mm.
3. THE BEVELLED SHOE PLATE USED WITH ELASTOMERIC BEARING MAY HAVE PINTLES. THE DESIGNER SHALL DETAIL THIS REQUIREMENT.
4. TRANSVERSE TIES SHALL BE PROVIDED BETWEEN GIRDER AT LOCATIONS ACCORDING TO THE DESIGN TABLE AND TO BE SHOWN ON THE GIRDERS LAYOUT PLAN.
5. IF INSERTS FOR CANTILEVER REINFORCEMENT ARE REQUIRED, THEY SHALL BE DETAILED BY THE DESIGNER.
6. IF CROSS FALL OF DECK IS GREATER THAN 2%, DESIGNER SHALL MODIFY THE TRANSVERSE TIE DETAILS B1 OR C1 TO SUIT.
7. THE 'NOTES TO DESIGNER' SHALL BE DELETED FROM THIS DRAWING PRIOR TO ISSUING OF THE CONTRACT.

REFER TO 1.1.8 IN THE STRUCTURAL MANUAL FOR PROFESSIONAL ENGINEER STAMPING REQUIREMENTS.

STANDARD DRAWING
JULY 2014

SS107-15

PRESTRESSED BOX GIRDERS DETAILS

REVISIONS	DESCRIPTION			
DESIGN	CHK	CODE CHBDC-06	CL 625-ONT	DATE
DRAWN	CHK	SITE		DWG

MINISTRY OF TRANSPORTATION, ONTARIO PR-D-707 88-05